SECURITY
MADE IN GERMANY
SINCE 1883

EASYLOX □□□□□□□□ □□□□□□□□ □□□□□□□ - □□□□□□□□ □□□□□□□

□□. □□□□□□□□□□: EASYLOX.SYSTEM

□□ □□□□□□□□□□ □□□ STUV □□□□□ □□□□□□□□□□ □□□ □□□□□□□□□□□□□□ □□ EASYLOX, □□□ □□□□□□□ □□□□□□□□ □□□□□□□□□□□□□ □□ □□□□□□□□□□ □□□□□□□□□□, □□ □□□□□ □□□□□□ □□ □□□□□□□□□□□□□ □□□□□□□ □□ □□□ □□□□□□□□□ □□□□□□□□. □□□□□□ □□ □□□□□□□□□□□ □□□□□□□□□ □ □□□□□□□□ □□□□□□; □□ □□ □□□□□□□□ □□□□□□□□ □□□□□□□□□ □□ □□□□□□□□□□□□ □□□□□□□ □□□□□□□□□□□□□ □□□□□□□□□□□□□□ □□□□□□□□□□ □□□ □□□□□□□□□□□□ □□□□□□.

□□□□□□□□□□□□□□□□

- □□□□□□□□□□□□ □□ □□□□ □□□□□□□□□□□□ □□□□□□□□□□
- □□□□ □□□□□□ □□□□□□□ □□□□ 45 □□□□ 165 mm
- □□□□□□□□□□□□□: □□□□□□□□□□ □□□□□ □□□□□□□ / Push bar
- □□□□□□□□□□□□□: □□□□□□□ OEM □□□ □□□□□□□□□ □□□□□□□ □□□□ □□□□□□□□
- □□□□□□□□□□□□ □□□□□□□□□□ □□□□ □□□□□□□□□□ □□□□□□□□ □□□□□ □□□□□□□□□□□ □□□□□ (□□□□ □□□□□□□□ □□□□□□□□□□ □□□□□□□□□)
- □□□□□□□□□□□ □□ □□□□□□ □□□□□□□□□□□ □□ □□□□ □□□□□□□□ (□□□□□□□□ □□□□□□□□□□□□□), □□□□□□□□□□□□□ □□□□□□□□□□□□ 1 – 10 □ □□□ □□□□□□□ □□□□□□ □□□□□□ □□□□□□□□□□□
- □□□□□□□ □□□□□ □□□□□ □□ □□ STUV □□□□□□□□ □□□□□□□□□□□□□ VARILOX

□□□□□□□□□□ □□□□□□□□□□□□

□□□□□□□□, □□□□□□□□, □□□□□ □□□□□□□□□□□□□ □□□□ □□□□□□□□□□□□ □□□□ □□□□□□□ □□ □□□□□□ □□□□ □□□□□□□□ □□□□□□□□□□□□□. □□□□□ □□□□□□□□□□ □ □□□□□□□ □□□□□ □□□□ □□□□□□□□□□□□ □□□□□□□□□□□□ □□□□ □□□□□□□ □□□□ □□ □□□□□□□□□□□□□□□□□ □□□□ □□□□□□□□□□□.

□□□□□□□□□□□ □□□□□□□

- □□□□□□□□□□□□□□□ □□□□□□□□□□ □□□□□□□□□
- □□□□□□□ □□□□□□□□□
- □□□□□□□□□ □□□□□□□□□□□□□□ □□□□□□
- □□□□□□□□□□□ □□□□□□□□□□□□ □□□□□□□□□□□/□□□□□□□

- [illegible]
- [illegible]

[illegible]

[illegible] [mm]	45 [illegible] 165
[illegible]	[illegible]
[illegible]	[illegible]
[illegible]	RAL 9.005
[illegible] [illegible]	[illegible] / [illegible]
[illegible]	[illegible] [illegible] [illegible] [illegible] [illegible] EN 179
[illegible] [illegible]	-30°C [illegible] +80°C
[illegible] [illegible]	45 [illegible] 165
[illegible] [illegible]	[illegible]
[illegible] [illegible]	[illegible]
[illegible]	[illegible]
[illegible] [illegible]	[illegible] [illegible]
[illegible] [illegible] [mm]	80

SECURITY
MADE IN GERMANY
SINCE 1883

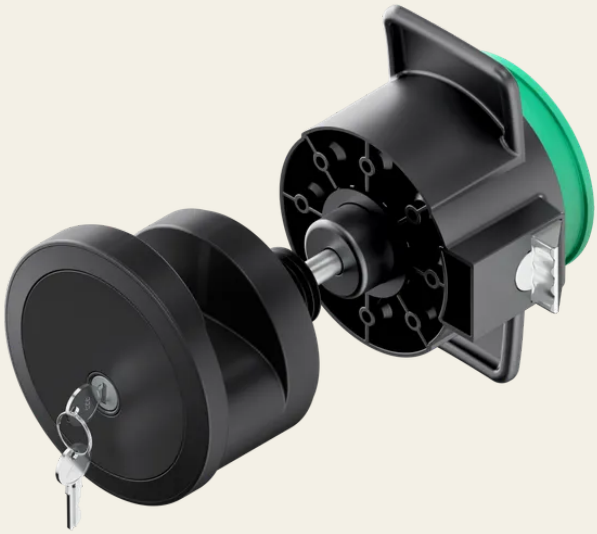

SECURITY
MADE IN GERMANY
SINCE 1883
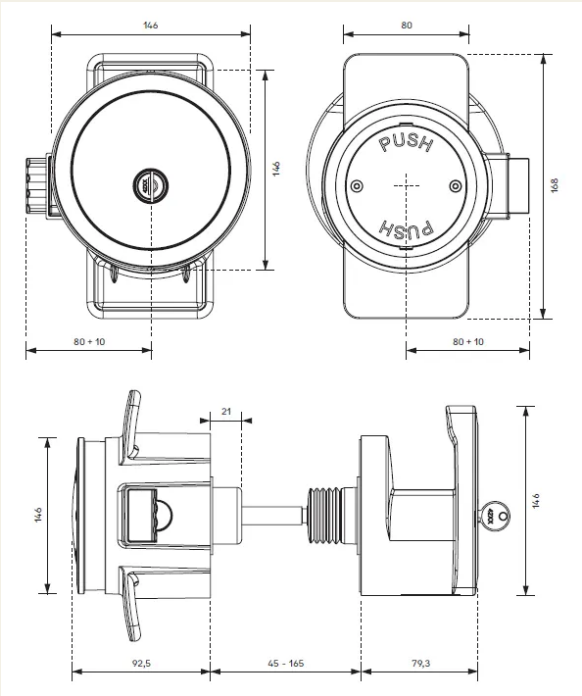
SECURITY
MADE IN GERMANY
SINCE 1883