SECURITY
MADE IN GERMANY
SINCE 1883

VARILOX □□□□□□□□ □□□□□□□ □□□□□□□□□ □□□□□□□ □□ □□□□□□ □□□ □□□□□□□□□□ □□□□□□

□□. □□□□□□□□□□: VARILOX.TUBE.MP

□□□□□□□□□ □□□□□□□□□□□□

□□ □□□□□□□ □□□□□□□□□ □□□□□□□ □□□□□□□□□□□□ VARILOX □□ □□□□□ □□□ □□□□□□□□□□□ □□□□□□□ □□□□□□□ □□ □□□□□□□□□□□□□ □□□□□ □□ □□□□□□ □□□□□□□ □□□□□□□ □□□□□ □□ □□□□□□□□□ □□□□□□□□□□□□ □□□□□□□□□□□□□. □□ □□□□□□□□□ □□□□□□□□□ □□□□□□□□□□□□□ □□□□□□□ □□ □□□□ □□□□□□ □□□□ □□□□□□□□□□□□□□□ □□□□□□□□□□□□□ □□□□□□□□□□□□□ □□ □□□□□□□, □□□□□□ □□□□ □□ □□□□□□□□□□□ □□□□□□ □□□□□□□□□ □□□□ □□□□□□□□□□□□□ □□□□ □□□□□□ □□□□ □□□□□□□ □□□□ □□□□ □□□□□□□.

□□□□□□□□□□□ □□□□□□□

- □□□□□□□□□□□□□□□□ □□□□□□□□□□ □□□□□□□□□
- □□□□□□□ □□□□□□□□□
- □□□□□□□□□ □□□□□□□□□□□□□□ □□□□□□
- □□□□□□□□□□□ □□□□□□□□□□□□□ □□□□□□□□□□□□/□□□□□□□
- □□□□□□□□□□□□□□□□ □□□□□□□□□
- □□□□□□□□□ □□□□□□□□□□□□□□□□□ □□□□□□□

□□□□□□□□ □□□□□□□□□□□□□□□□□

□□□□□ □□□□□□ [mm]	60 □□□ 180
□□□□□□	□□□□□□□□□□□□□ □□□□□□□□□
□□□□□ □□□□□□□	□□□□□□ / □□□□□□□□□□
□□□□□□ □□□□□□□□□□□□□□□	-40°C □□□ +80°C
□□□□□□ □□□□□□□	60 □□□ 180

SECURITY
MADE IN GERMANY
SINCE 1883

[illegible]

[illegible]	[illegible]
[illegible]	PZ, Kaba, [illegible]
[illegible]	[illegible]
[illegible]	[illegible]
[illegible] [mm]	80

SECURITY
MADE IN GERMANY
SINCE 1883

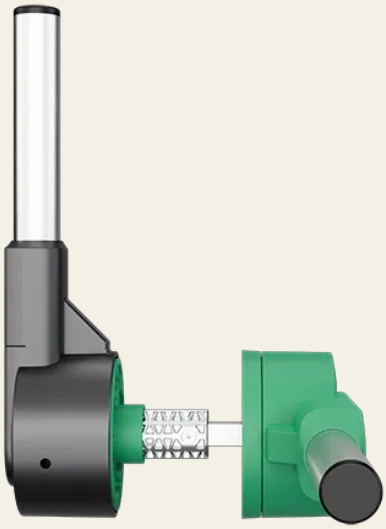

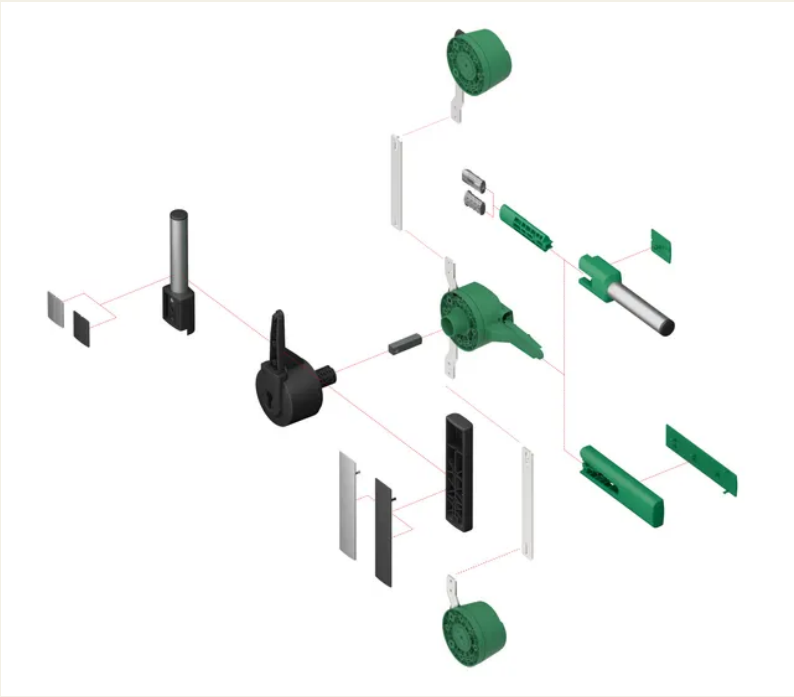

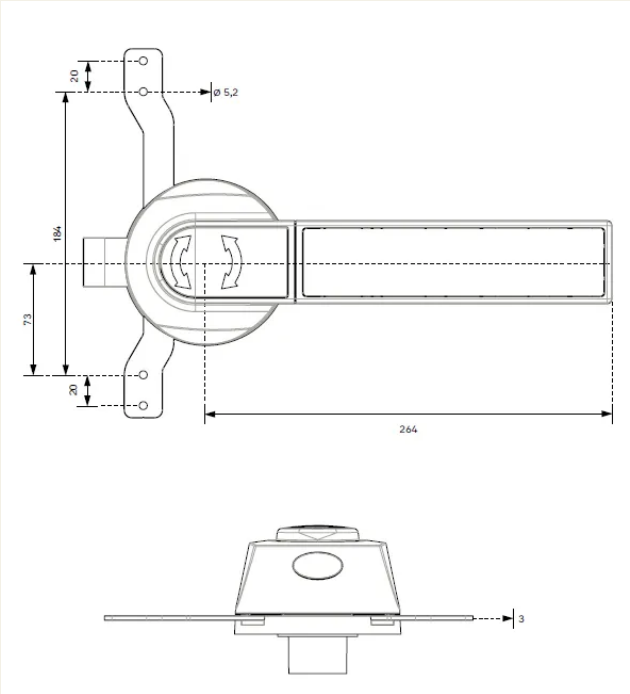
20
ø 5,2
184
73
20
264
3