□□□□□ □□□□□□□□□□

SECURITY
MADE IN GERMANY
SINCE 1883

VARIOFLEX2.KG160.EDG

□□. □□□□□□□□□□: VARIOFLEX2.KG160.EDG

□□□□□□□□□□□□□□□□

- □□□□□□□□□□□□□□ □□ 3D
- □□□□□□□ □□□□ 160 kg
- □□□□□□ □□□□□□□□□□□□ 180°
- □□□□□□□□□□□□ □□ □□□□□□□□□ □□□□□□□□□□□□ □□□□□□□□□
- □□□□□□□□□□□□ □□ □□□□□□□□□□□□ □ □□ □□□□□□□□□□□□ □□□□□□□
- □□□□□□□ □□□□ □□□□□□□□ □□□□□□□□□□□□□□□
- □□□□□□□□□□□□□: □□□□□□□□□□□□ □□ □□□□□□□ □□ □□□□□□□□□□ □ □□ □□□□□□□□□□ □□□□□□□□□□
- □□□□□□□□□□□□ □□□□□□□□□□□ □□□□□ 120° (□□□□□ □□□□□□□□□□□□ □□□□□□□)
- □□□□ □□□□□□□ □□□□ 49 mm □□□□□□□□□□□, □□□□□□□ □□□□□□□□□□□□□ 29 mm
- □□□□□□□□□□□□, □□ □□□□□□□□□□ □□□□□□□□□□ (□□□□□□□□□□□□□□ 2□ □□□□□□□□□)
- □□□□□□□□□ □□□□□□□□□ □□ □□□□□□□□□□

□□□□□□□□□□□ □□□□□□□□□□□□□

□ □□□□□□□□ □□□□□□□□ Varioflex □□□□ □□□□□□□□□□□□ □□□□□□□ □□□□□□ □□□□□□□□ □□□□ □□□□□□ □□ □□□□□□□ □□□□□□□ □ □□□□□□□ □□ □□□□□ □□□□□□□□□□□ □□□□□□□□□□□□. □□ □□ □□□□□□ □□□□□□□□□□□□□ □□□□□□□ □□□□□□□□□□□□ □□□□□□□□ □□□□□□□□□□□□□□□ □□□□□□□ □□□□ 160 kg □□□□ □□□□□□□□□ □□□□□□□ □□□□ □□□□□□□□□. □□□□□ □□□□ □□□□□□□□□ □□□□□□□□□□□□ □□□□□□□□□ □□ □□□□□□□□□□□, □□□□□□ □□□□ □□ □□□□□□□□□ □□□□□□□□□□□□, □□□□ □□□□□□ □□□□□□□□□□□□□.

□□□□□□□□□□□ □□□□□□□

- □□□□□□□□□□□□□□□□ □□□□□□□□□ □□□□□□□□□
- □□□□□□□ □□□□□□□□
- □□□□□□□□ □□□□□□□□□□□□□ □□□□□□
- □□□□□□□□□□□ □□□□□□□□□□□□□ □□□□□□□□□□□□/□□□□□□□

[illegible]

[illegible]

[illegible] [mm]	[illegible] 49
[illegible]	[illegible]
[illegible]	[illegible]
[illegible]	[illegible] / [illegible]
[illegible]	3D
[illegible]	180°
[illegible]	[illegible]
[illegible]	[illegible]
[illegible]	[illegible] / [illegible]
[illegible]	[illegible]
[illegible] [kg]	[illegible] 160

SECURITY
MADE IN GERMANY
SINCE 1883

SECURITY
MADE IN GERMANY
SINCE 1883
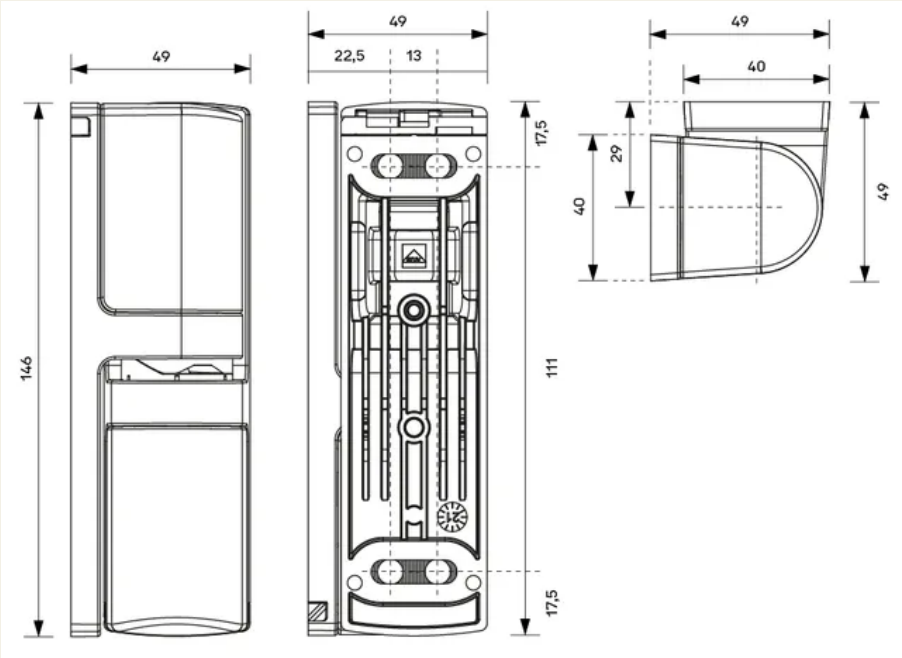
SECURITY
MADE IN GERMANY
SINCE 1883