Data sheet

SECURITY
MADE IN GERMANY
SINCE 1883

Loop lever

Article No.: V17200080

The loop levers are suitable for the folding door basquille

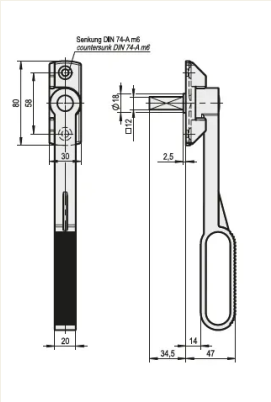

Properties

- 12mm square pin

Functional description

The loop levers are made of zinc-plated steel. The lever has a 12 mm square.

Technical data

Material	Steel
Surface	Zinc-plated
Colour	Silver
Dimensions [mm]	47 x 80 x 12

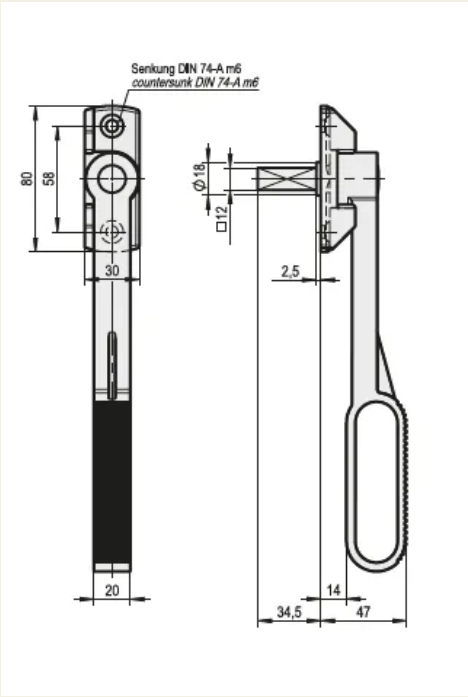
Senkung DIN 74-A m6
countersunk DIN 74-A m6
80
58
30
20
Ø18
□12
2,5
14
34,5
47