Data sheet

SECURITY
MADE IN GERMANY
SINCE 1883

# Insert deadbolt

Article No.: V18361420

The push-in square-edged latches are designed for flush assembly in hollow profiles. Due to the small dimensions, assembly in very narrow profiles is possible.

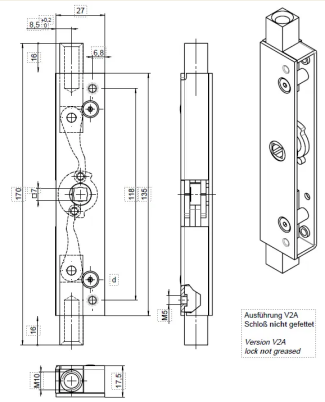


## Properties

- For screwing on to hollow profiles
- Flush-mounted
- Without spring

## Functional description

These channel bolts are made entirely of stainless steel. They have no spring and are operated via a 7 mm square.

## Technical data

| | |
|---|---|
| Material | Stainless steel |
| Surface | Blank |
| Colour | Silver |
| Dimensions [mm] | 135 x 27 x 17.5 |

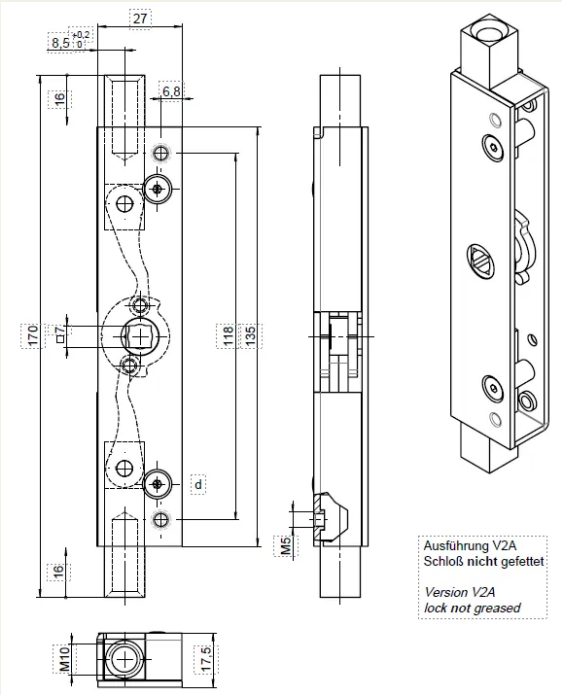
27
8,5 +0,2 0
6,8
16
170
□7
118
135
d
16
M5
M10
17,5
Ausführung V2A
Schloß nicht gefettet
Version V2A
lock not greased