[illegible]

SECURITY
MADE IN GERMANY
SINCE 1883

PIPE [illegible] [illegible] [illegible]

[illegible]: BOLT 100

[illegible]

- [illegible] [illegible] [illegible] [illegible] 76 [illegible] 160 [illegible]
- [illegible] [illegible] [illegible] [illegible] -25°C
- [illegible] [illegible] [illegible] [illegible] 3 [illegible], [illegible] [illegible] 1 – 10
- [illegible] [illegible] [illegible]
- [illegible] [illegible] [illegible]
- [illegible] [illegible] [illegible]
- [illegible] [illegible] [illegible] [illegible]
- [illegible]: [illegible] [illegible] KABA
- [illegible]: [illegible] [illegible] [illegible] [illegible] [illegible] [illegible] [illegible] [illegible] [illegible]

[illegible] [illegible]

- [illegible] [illegible]
- [illegible] [illegible] [illegible]
- [illegible]/[illegible]
- [illegible] [illegible]

[illegible] [illegible]

[illegible]	[illegible]
[illegible]	[illegible]
[illegible]	RAL 9.005

[illegible]
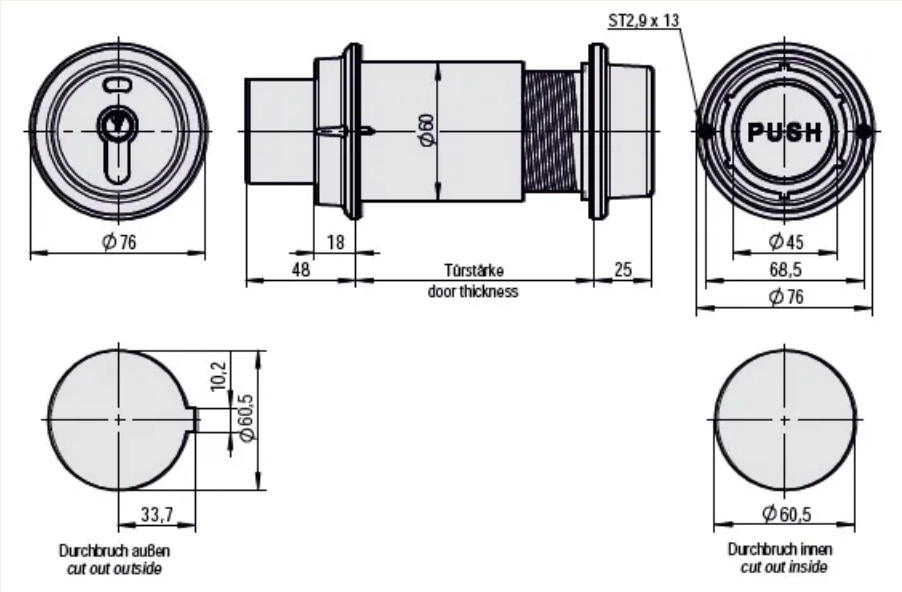
[illegible]	-[illegible] -25 °C [illegible] +80 °C
[illegible]	[illegible]
[illegible]	PZ
[illegible]	[illegible]
[illegible]	[illegible]
[illegible]	[illegible]
[illegible] [illegible] [illegible]	[illegible] 76 [illegible] 160
[illegible]	[illegible] / [illegible]