[illegible]

SECURITY
MADE IN GERMANY
SINCE 1883

[illegible]

[illegible]: PHV 100

[illegible] [illegible] [illegible] [illegible] [illegible] [illegible] [illegible] [illegible] [illegible], [illegible] [illegible] [illegible] [illegible], [illegible] [illegible] [illegible] [illegible] [illegible] [illegible] [illegible]

SECURITY
MADE IN GERMANY
SINCE 1883

[redacted]

[redacted]	[redacted] x [redacted] [redacted]
[redacted] [redacted]	[redacted] / [redacted]
[redacted] [redacted]	[redacted]
[redacted] [redacted]	[redacted]
[redacted] [redacted]	[redacted] [redacted]
[redacted]	[redacted]

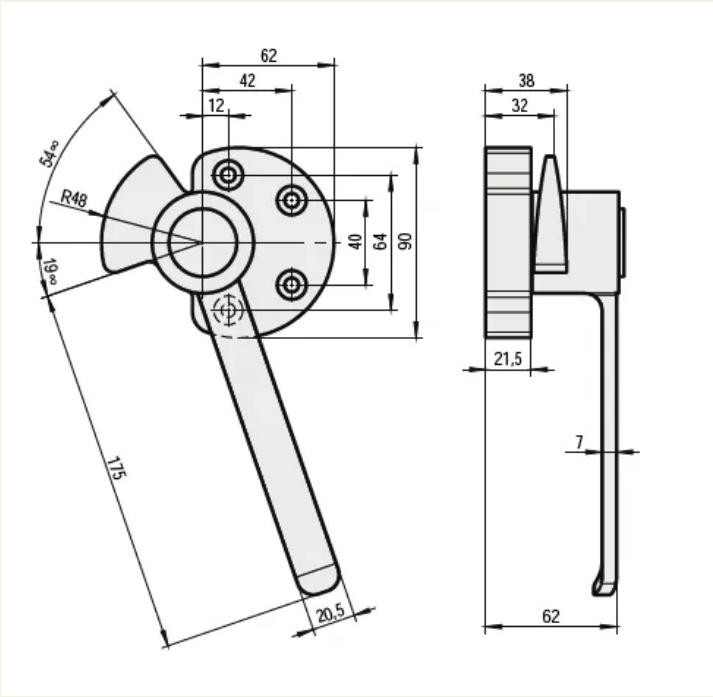
62
42
12
54°
R48
19°
40
64
90
175
20,5
38
32
21,5
7
62