SECURITY
MADE IN GERMANY
SINCE 1883

□□□□□-□□□□□ (□□□□□□□□□□□□□□□)

□□□□□ □□□□□□□: PHV 200

□□□□□□□□□□ □□□□□□□□□□□□□□□ □□□□□□□□ □□□□□□ □□□□□□□ □□ □□□□□□□□□□□□□□ □□□□□□, □□□□□□□□□□□□□□□□ □□□□□□□□□ □□□□□□□□□□□□□□□□□□□ □□□□□□, □ □□□□□□□□ □□□□□□ □ □□□□□□□□□□□ □□□□□□□□□□□□□ □ □□□□□□□ □□□□□□□□□□□ □□□□□□□□□□□ □□□□□□ □ □□□□□ □□ □□□□□□ □□□□□□□□□□□ □ □□□□□□□□□□ □□□□□□□□□□□□□.
□□□□□□□□□□□ □□□□□□□□□□ □□□□□□□□□□□□□□□□□□□□□□□ □□□□□□□□□□ □□□□□□□□□ □□□□□□□□□□ □□□□□ □ □□□□□□□□□□□□□□□□□ □□□□□□□□□□.

□□□□□□□□□

- □□□□□□□□□□□□□□ □□□□□□, □□□□□□□□□□□□□□□□□□ □□□□□□, □□□□□□□□□□□□□□ □ □□□□□□□□□□□□□□□□□ □□□□□□□□□□□
- □□□□□□ □ □□□□□□□□□□□□□□□□□□□□□□ □□□□□□□□□□□
- □□□□ □□□□□□□□□ □□□□ □□□□□□□ □□□□□□□□□□□
- □ □□□□□□ □□□□□□□
- □□□□□□□□□□ □□□□ □□□□□□□□ □□□□□□□□□□
- □□□□□□□ □□□□ □□□□□□□□□□□ □□□□□□□□□□□

□□□□□□ □□□□□□□□□□□

- □□□□□□□□□□□□□□□□ □□□□□□
- □□□□□□□□ □□□□□□□□□□□□□□□□ □ □□□□□□□□□□
- K

□□□□□□□□□□□□ □□□□□□□□□□□□□□□□

□□□□□□□□□□	□□□□□□□□□□□□□ □□□□□□
□□□□□□□□□□□□□	□□□□□□□□□□□□□ □ □□□□□□□□□□□□□□□□□ □□□□□□□□□□□

SECURITY
MADE IN GERMANY
SINCE 1883

[redacted]

[redacted]	[redacted]
[redacted]	[redacted]
[redacted]	[redacted]
[redacted]	[redacted]
[redacted]	[redacted] / [redacted]

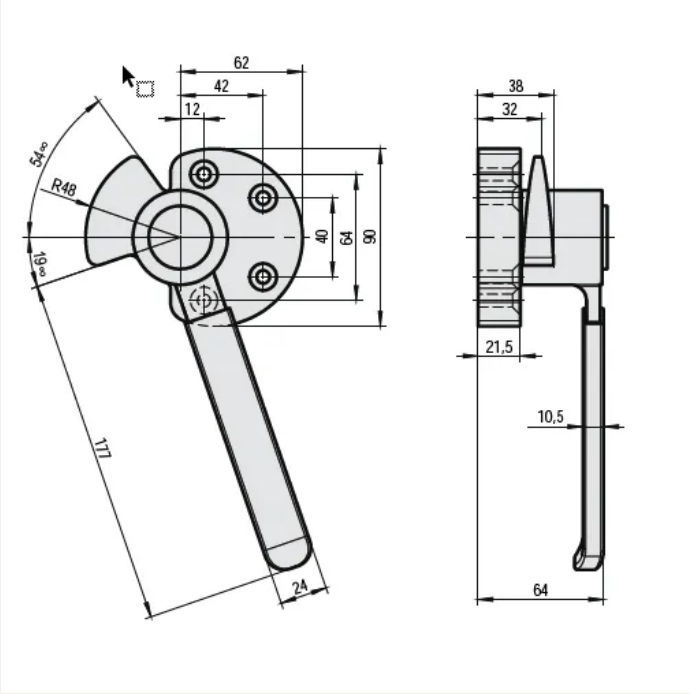
62
42
12
54°
R48
19°
40
64
90
177
24
38
32
21,5
10,5
64