[illegible]

SECURITY
MADE IN GERMANY
SINCE 1883

[illegible] PYLOCX

[illegible]: PL7200

[illegible] [illegible] [illegible], [illegible] [illegible] [illegible], [illegible] [illegible] [illegible]. [illegible] [illegible] [illegible] [illegible] [illegible]. [illegible] [illegible]: [illegible] [illegible] [illegible] [illegible] [illegible]. [illegible] [illegible] [illegible] [illegible].

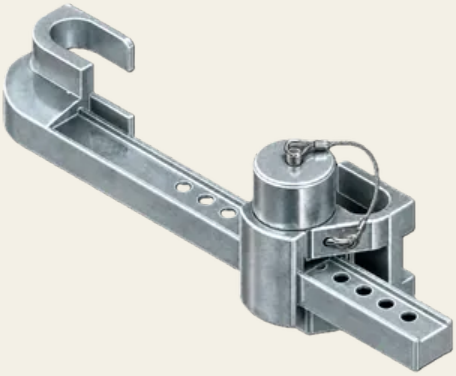

[illegible]

- [illegible] [illegible] [illegible]
- [illegible] [illegible] EPS
- [illegible] [illegible]
- [illegible] [illegible] [illegible] PIN-[illegible]
- [illegible] [illegible]

[illegible] [illegible]

[illegible] [illegible] PYKEY® [illegible] [illegible] [illegible]. [illegible], [illegible] [illegible] [illegible] [illegible]. [illegible] [illegible] [illegible] [illegible], [illegible] [illegible] [illegible].

[illegible] [illegible]

[illegible]	[illegible] V4A (1.4.404)
[illegible]	[illegible] EPS
[illegible]	[illegible]
[illegible]	[illegible]

SECURITY
MADE IN GERMANY
SINCE 1883

□□□□□□□□□□□□□ □□□□□□□□□□□□□□□□□

□□□ □□□□□□□□□□	□□□□□□□□□□
□□□□□□□□□□□□□□□□	□□□□□□□□□□□ □□□□□□ □□□□□□□□□ □□□□□□□□□ □□□□□□□□□□□□□ □□ 210 □□ □□ 420 □□
□□□ □□□□□□□	IP68
□□□□□□□□□ □□□□□□□□□□□	-40°C - +60°C
□□□□□□□□ □□□□□□□□□□□	□□□□□□□□□□□□□□□□□□□□□□
□□□□□□□□□ □□□□□□□□□□	PYKEY
□□□ □□□□□□	□□□□□□□□□ □□□□□□□□
□□□□□□□□□□ □□□□□□□□□□□	□□□□□□□ □□□□□□
□□□ [□□]	3,8
□□□□□□□□□□□□□□□□	□□□□□□□□□□□□□□□, □□□□□□□□□ □ □□□□□□□□□□□□□ □□□ □□□□□□□□□□□□□□ □□□□□□□□□□□□□□□□
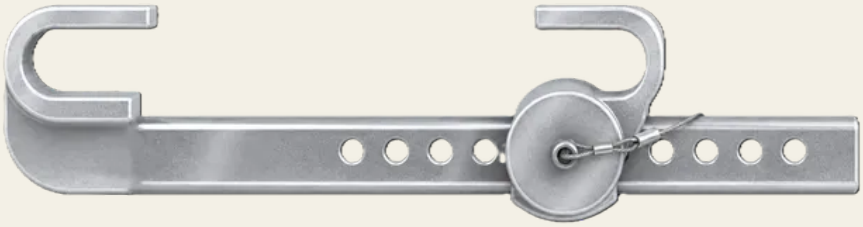
SECURITY
MADE IN GERMANY
SINCE 1883