[illegible]

SECURITY
MADE IN GERMANY
SINCE 1883

[illegible], [illegible]

[illegible]: TÜ1800

[illegible]

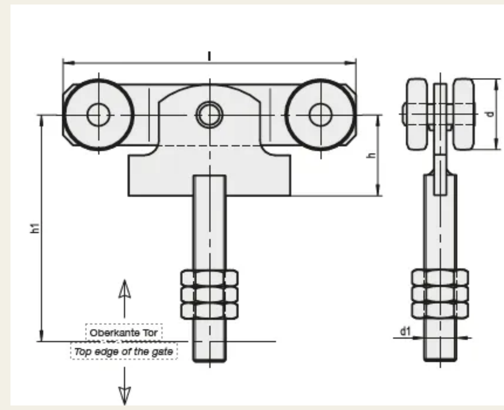

[illegible]

— [illegible], [illegible]

[illegible]
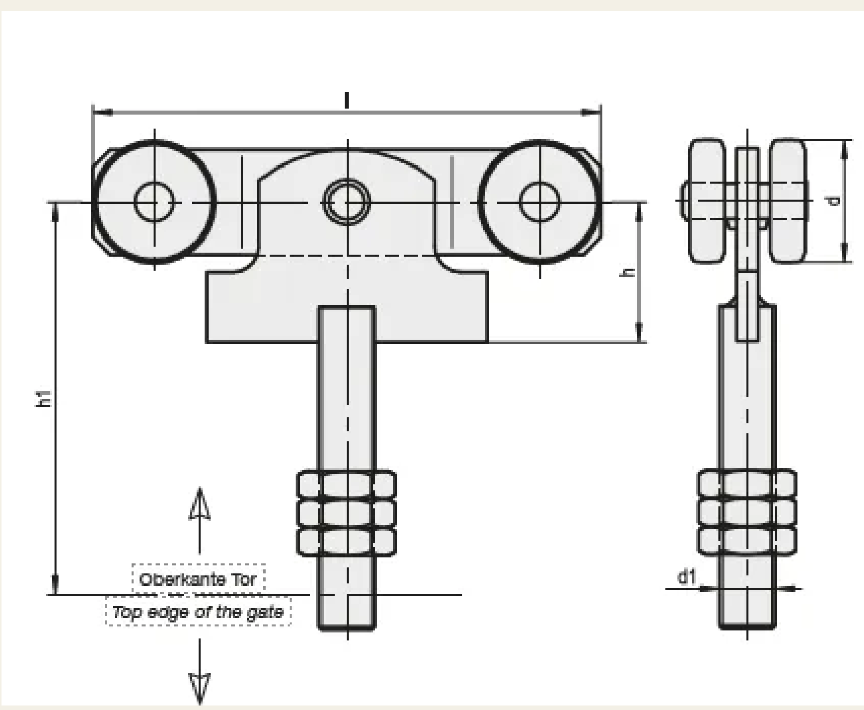
[illegible].