SECURITY
MADE IN GERMANY
SINCE 1883

□□□□□□□□□ □□□□□□ □ □□□□□□□□□□ □□□□□□□□□□

□□□□□ □□□□□□□: TÜ2250

□□□□□□□□□□□□□□ □□□□□□□ □□□□□□□□□□□□□□ □ □□□□□□□ □□□□□□ □□□□□□□□□ □ □□□□□□□□□□ □□□ □□□□□□□ □□□□□□□□□□□□□□□.

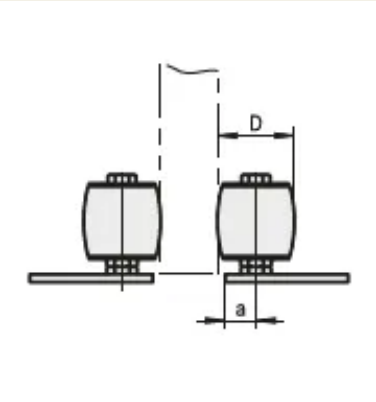

□□□□□□□□□

- □□□□□□, □□□□□□□□□□□□□□ □ □□□□□□□□□□□□□□□□

□□□□□□□□□ □□□□□□□□
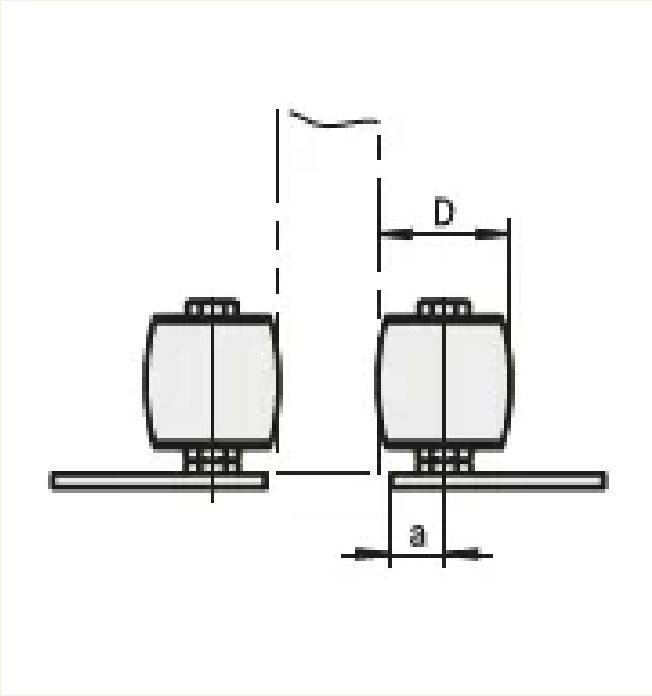
□□□□□ □□□□□□□□□□□□□□ □□□□□□□ □□□□□□□□□□□ □□□□□□ □□□□□□□□□ □□□□□□ □□□□□□□□□□□□□□□.