SECURITY
MADE IN GERMANY
SINCE 1883

□□□□□□□□ □□□□□□ □ □□□□□□□□

□□□□□ □□□□□□□: TÜ2400

□□□□□□□□□□□□□ □□□□□□ □□□□□□□□□□□□□□ □ □□□□□□□ □□□□□□ □□□□□□□□ □ □□□□□□□□□□ □□□ □□□□□□□ □□□□□□□□□□□□□□□.

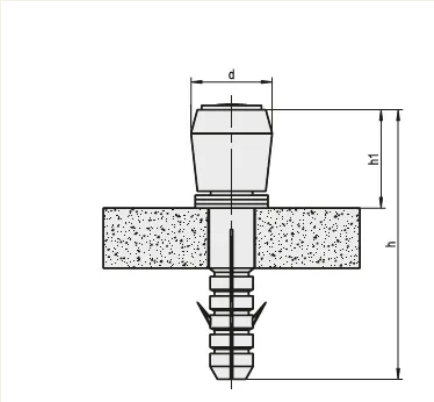

□□□□□□□□□

- □□□□□□, □□□□□□□□□□□□□□ □ □□□□□□□□□□□□□□□□

□□□□□□□□□ □□□□□□□□
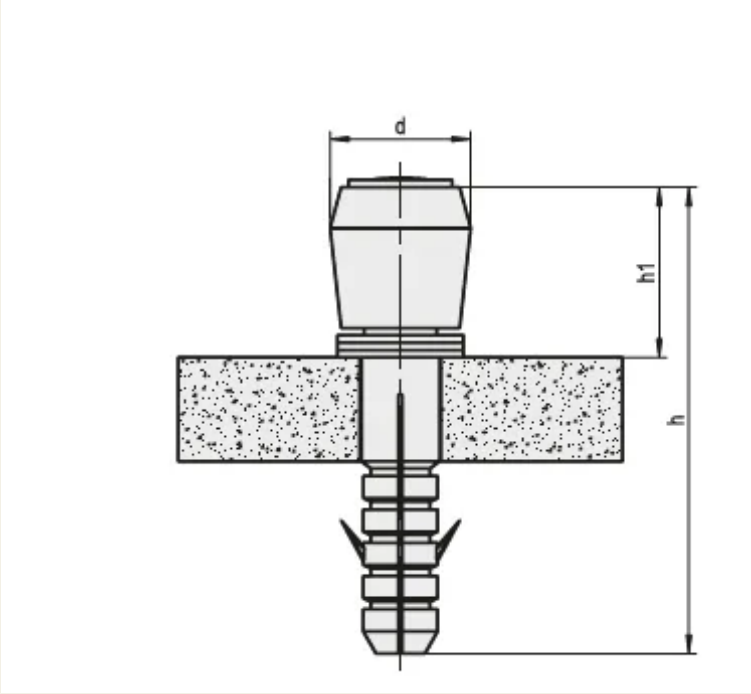
□□□□□ □□□□□□□□□□□□□□□□□□ □ □□□□ □ □□□□□□□□□□□□□□□ □□□□□□□□□□ □□□□□□□□□.