SECURITY
MADE IN GERMANY
SINCE 1883

□□□□□-□□□□□□□□ □□□□□□□□□□□□□□

□□□□□ □□□□□□□: TÜ3250

□□□□□□-□□□□□□□□□ □□□□□□□□□□□□□ □□□□ □□□□□□□□□□□□
□□□□□□□□□□□□ □□□□ □□□□□□□□□□□□□ □□□□□□□.

□□□□□□□□□

— □□□□□□□□□, □□□ □□□□□□□ □□□□□□ □□□□ □□□□□□□□□□□□□ □□□□□□

□□□□□□□□□ □□□□□□□□
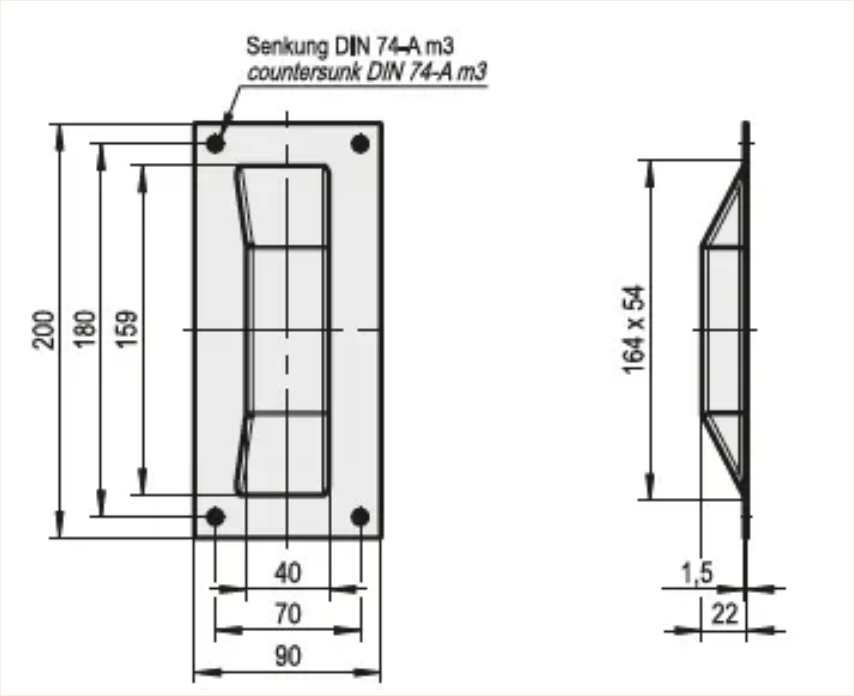
□□□□□□ □□□□□□□□□□ □□□ □□□□□□□□□□, □□□□□□ □ □□□□□□□□□□□□□□
□□□□□□. □□□□ □□□□□□□□□□ 4-□□□□□□□ □□□□□□□□□ □□□□□□□□.