SECURITY
MADE IN GERMANY
SINCE 1883

Thermolox □□□□□□ □□□ □□□□□□□□ □□□□□□□□, 2-□□□□□□□□□□□□

□□□□□ □□□□□□: THERMOLOX.2H

□□□□□□□□□□ □□□□□□□□ □□□□□□□□□□□□□□□ □□□□ □□□□□□□□□□□□□□□□ □ □□□□□□□□□□□□ □□□□□□□□□□□□□□□□ □□□□□□□□□□□□ □□ □□□□□ □□□□□□□□□□□□□□□□□□□□ □□□□□□□□□□ □ □□□□□□□□, □□□□□□□□□□, □□ □□□□□□□□□□□□□□□□□□□□□ □ □□□□□□□□□□□□□□□□, □□□□□□□□□□□ □□ □□□□□□. □□□□□□□□□□□ □□□□□□□□□□□□□ □□□□□□□□□ □□□□□□□□□□□ □□□□□□□□□□□□□ □□□□□□□□□□□ □□□□□□□□□, □□□□□□ □□□□ □□□□□□□□□ □□□□□□□□□ □□□□ □□□□□□□□□□□□□□□□□□□□ □□□□□□□□□□□ □ □□□□□□□□□□□□□ □□□□□□□□□. □□□□□□□□□ □□□□□□□□□□□□□□, □□□□□□□□□□□□□□□□□□□ □ □□□□□□□□□□□□□□□□□ (□ □□□. 500 000 □□□□□□□) □□□□ □□□□□□□□□□□□□□□□□ □□□□□□□□□ □□□□□□□□□□□□, □□□□□□□□□□, □ □□□□□□□□□ □□□□□□□ □□□□□□□□□□□□□□□□ □□□□□□□□□ □□□□ □ □ □□□□□□□□□□□□□□□□□ □□□□□□□□□□□□□□□. □□□□□□□□□□□□□ THERMOLOX □□□□□ □□□□□□: https://thermolox.stuv.de/

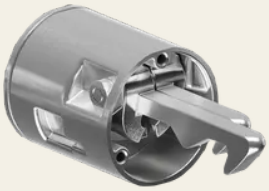

□□□□□□□□□

- □□□□□□□: ZAMAK
- □□□□□□□□□ □ 2 □□□□□□□□□ □ □□□□□□□□□□□ □□□□□□□□□
- □□□□□□□ □□ □□□□□□□□□□□□□ □□□□□□
- □□□□□□□□□ □□□□□□□□□□□□□ 47 - 62 □□ □□□□ 61 - 76 □□
- □□□□□□ □ □□□□□□□□□ □□□□□□□□ □□□□□□ □□□□ □ □□□□□□□□□□□ □□ □□□□□□□□□□□□□ □□□□□□
- □□□□□□□□□□ □□□□□□□ □ □□□□□□□□□□□□□□□□ □□□□□□□□ □ □□□□□□□□

[redacted]

[redacted] [redacted] [redacted] [redacted] [redacted], [redacted] [redacted] [redacted] [redacted], [redacted], [redacted]- [redacted] [redacted] [redacted] [redacted] [redacted] [redacted] [redacted] [redacted]. [redacted] [redacted] [redacted] [redacted] [redacted] [redacted] [redacted], [redacted] [redacted] [redacted] [redacted] [redacted] [redacted] [redacted] [redacted] [redacted]. [redacted] THERMOLOX [redacted] [redacted] [redacted] [redacted] [redacted] [redacted] [redacted] [redacted] [redacted], [redacted] [redacted] [redacted] [redacted] [redacted], [redacted], [redacted] 90°. [redacted] [redacted] THERMOLOX [redacted] STUV [redacted] [redacted] [redacted]: [redacted] [redacted] [redacted] [redacted] [redacted] THERMOLOX [redacted] [redacted] [redacted] [redacted]. [redacted] [redacted] [redacted] [redacted] [redacted]. [redacted] [redacted], [redacted]. [redacted] STUV [redacted] [redacted] [redacted] [redacted], [redacted] [redacted] [redacted] [redacted] [redacted] [redacted]: THERMOLOX [redacted] [redacted] [redacted] [redacted].

[redacted]

- [redacted]
- [redacted] [redacted] [redacted]

[redacted]

[redacted]	ZAMAK
[redacted]	[redacted]
[redacted] [redacted]	[redacted] / [redacted]
[redacted] [redacted]	[redacted]
[redacted] [redacted]	[redacted]
[redacted]	[redacted]

[redacted]

[redacted]

[redacted]

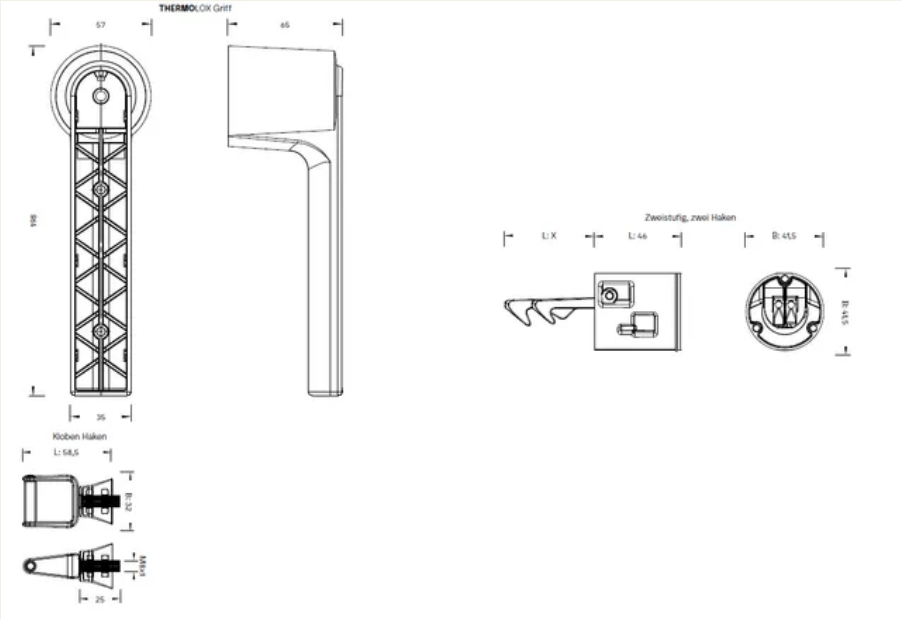
THERMOLOX Griff
57
65
158
35
Kloben Haken
L: 58,5
B: 32
M8x1
25
Zweistufig, zwei Haken
L: X
L: 46
B: 41,5
B: 41,5