SECURITY
MADE IN GERMANY
SINCE 1883

□□□□□□□□□□□□□□□□ □□□□□□ □□ □□□□□□□□□□□□ □□□□□□, 3-□□□□□□□□□□□

□□□□□□ □□□□□□□: TT 250

□□□□□□□□□□□□□□□□□ □□□□□□ □□□□□□□ □□□□□□□□□□□□□□□ □ □□□□□□□□□□□□□ □□□□□□.

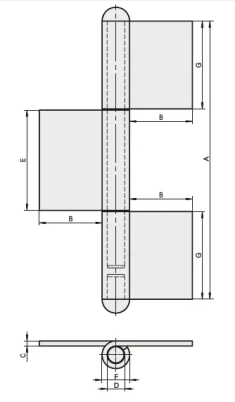

□□□□□□□□□ □□□□□□□□

□□□□ □□□□□□ □□□□□□□□□□□□□ □□□ □□□□□□□□□□□□□□ □□□□□□, □□□□□□□□□□ □□□□□□□□□□□□□□□□□□□□□□ □ □□□□□□□□□□ □ □□□□□□□□□□□□ □□□□□□□□□□.

□□□□□□□□□□□□□ □□□□□□□□□□□□□□□□□□
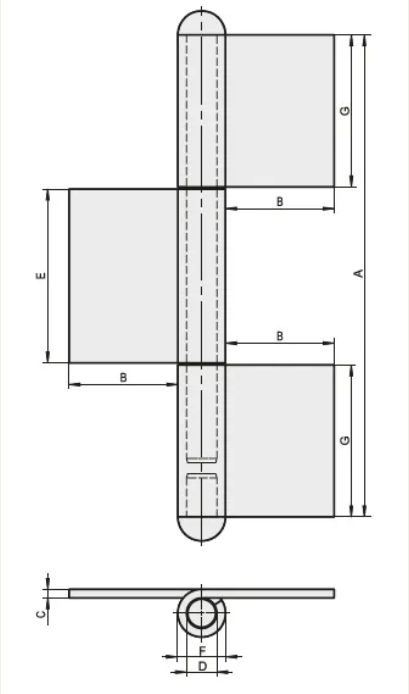
□□□□□□□□□□	□□□□□□□□□□□□□ □□□□□□
□□□□□□□□□□□□□	□□□□□□
□□□□□	□□□□□□□□□