SECURITY
MADE IN GERMANY
SINCE 1883

□□□□□□□□□□□□□□□□ □□□□□ □□ □□□□□□□□□□□□ □□□□□,
2-□□□□□□□□□□□

□□□□□□ □□□□□□□: TT 400

□□□□□□□□ □□□□□ □□□□□□□□□□□□□□□ □□□□ □□□□□□□□□□ □□□□□□□.

□□□□□□□□□

- □□□□□□□□□□□□□ □□□□□□□□□□□□□ □□□□□□ □□□□□□□□ □□□□□□□□□□□□□
- □□□□□□, □□□□□□□□□□□□□□□□ □□□□□□□ □ □□□□□□□□ □□□□□□□ □□□□□□□□□□□□□ □□□□□□, □□□□□□□□□□
- □□□□□□□□□□□□□□□□ □□□□□□

□□□□□□□□□ □□□□□□□□

□□□□ □□□□□□ □□□□□□□□□□□□□ □□ □□□□□□□□□□□□□ □□□□□□,
□□□□□□□□□□□□□□□□□□□ □ □□□□□□□□□□ □ □□□□□□□□□□□ □□□□□□□□□□.

□□□□□□□□□□□□ □□□□□□□□□□□□□□□□□

□□□□□□□□□	□□□□□□□□□□□□□ □□□□□□
□□□□□□□□□□□□□	□□□□□□
□□□□□	□□□□□□□□□
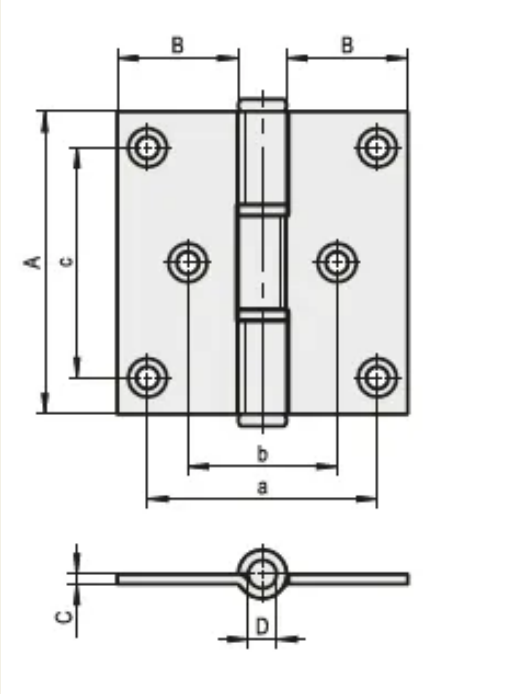
SECURITY
MADE IN GERMANY
SINCE 1883