SECURITY
MADE IN GERMANY
SINCE 1883

[illegible] [illegible] [illegible] [illegible] 2-[illegible] [illegible]

[illegible] [illegible]: TT100



[illegible] [illegible] [illegible] [illegible] [illegible] [illegible] [illegible] [illegible] [illegible] [illegible].

[illegible]

- [illegible]: [illegible], [illegible] [illegible]
- [illegible] [illegible] [illegible] [illegible] [illegible]
- [illegible] [illegible] [illegible] [illegible]

[illegible] [illegible]

[illegible] [illegible] [illegible] [illegible] [illegible] [illegible],
[illegible] [illegible] [illegible] [illegible] [illegible] [illegible].

[illegible] [illegible]

[illegible]	[illegible]
[illegible]	[illegible]
[illegible]	[illegible]

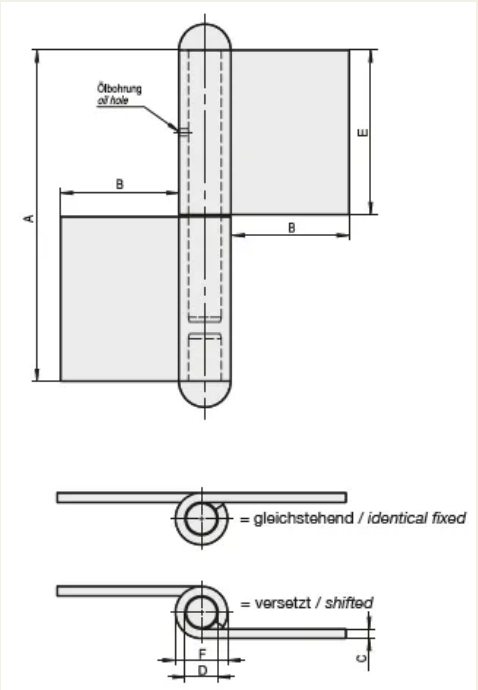
Ölbohrung
oil hole
A
B
B
E
= gleichstehend / identical fixed
= versetzt / shifted
F
D
C