SECURITY
MADE IN GERMANY
SINCE 1883

[illegible]

[illegible]: TT700

[illegible]



[illegible]

- [illegible]
- [illegible]
- [illegible]
- [illegible]

[illegible]

[illegible]

[illegible]

[illegible]	[illegible]
[illegible]	[illegible]
[illegible]	[illegible]

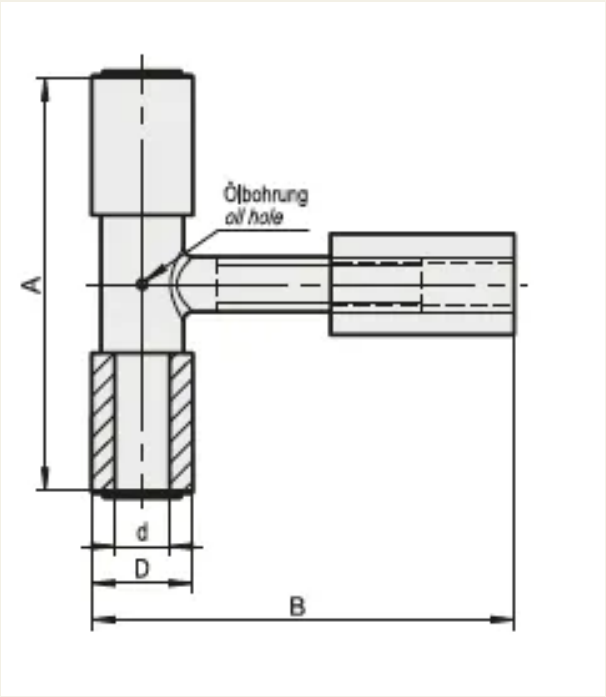
Ölbohrung
oil hole
A
d
D
B