SECURITY
MADE IN GERMANY
SINCE 1883

□□□□□□□□□□□ □□□□ □□□□□□□□□ □ □□□□□□□□□□□□□□□ □□□□□□□ □ 2 □□□□□□□□

□□□□□□ □□□□□□□: V02607100

□□□□□□□□□□□ □□□□ □ □-□□□□□□□□□ □□□□□□□ □□□□□□□□□ □□□□□□□□□ □□□□ □□□□□□□□□□□□□□□ □ □□□□□□□□□ □□□□□□□□□□□ □□□□□□□□□□□ □□ □□□□□□□ □□□□□□□ □□□□ □□□□□□. □□ □□□□□□□□□□□□□□□ □□□□□□□ □ □□□□□□□□□ □□□□□□□□□□□ □ □□□□□□□□□ □□□□□□□□□ □□□□□□□□□□□□□□□. □□□□□□□□□□ □□□□□□□□□□□□□ □□□□□□□□□□□□□ □ □□□□□□□□□□□□□□□ □□□□□□□□□□□□□□□ □□□□□□□□□□□ □□ □□□□□□□□□□□ □□□□□□□□□ □□□□ □□□□□□□□□□□□□□□ □□□□□□□□□□□, □□□□ □□ □□□□□□□ □□□□□ □□□□□□□□ □□□□□□□□□□□□□□□ □ □□□□□□□□□□□□□□□□□□□□□.

□□□□□□□□□

- □□□□□□□□□□□□□□ □□□□□□□ □□□□ □□□□□□□□□□ □□□□□□□□
- □□□□□□ □□□□□□□□□□□□□□□ □□□□□□□ / □□□□□□
- □□□□□□□□□□□ □□□□□□□□□□□□□□ □□□□□□□□□□ □□□□□□□□□ □□□□□□□□□
- □ □□□□□□□□□□□ 2 □□□□□□
- □□□□□□□□□□□□□□□□□□□□□□□□□ (□□□□□□□□□□ □□□□□□□□□□ □□□□□□□)

□□□□□□□□□ □□□□□□□□

□□□□□□□□□□□ □□□□□□ □□□□□□□ □□□□□□□□ □□□ □□□□□□□□□, □□□□□□□□□□ □□□□□□□□□□□ □ □□□□□□. □□□□□□□□□□□□□□, □ □□□□□□□□□□□□□, □□□□□□□□□□□ □□□□ □□□□□□□□□□ □□□□□□□□□□□□ □□□□□□□□□□□□□,
□ □□□□□□□□ IP □□ □□□□□, □□□□□ □□□□ □ □□□□□□□□□
□□□□□□□□□□□□□□□□□□□ □ □□□□□□□□□□□□□□□ □ □□□□□□□
□□□□□□□□□□□□□□□

□□□□□□□□□□□□ □□□□□□□□□□□□□□□□□

□□□□□□□□□	GD-Zn
□□□□□□□□□□□□□	□□□□□□□□□□□□□□□□

SECURITY
MADE IN GERMANY
SINCE 1883

[illegible]

[illegible]	[illegible]
[illegible]	[illegible] / [illegible]
[illegible]	[illegible]
[illegible]	[illegible]
[illegible]	IP65
[illegible]	[illegible] 2 [illegible] [illegible] XX 130
[illegible] [illegible]	[illegible] 20,2 x Ø 22,2
[illegible] [illegible]	18
[illegible] [illegible]	Ø 32
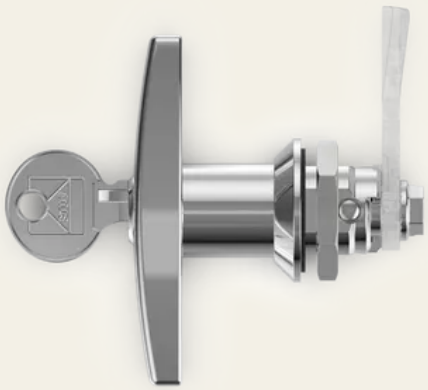
SECURITY
MADE IN GERMANY
SINCE 1883