[illegible]

SECURITY
MADE IN GERMANY
SINCE 1883

[illegible]

[illegible]: V14060000

[illegible] [illegible] [illegible] [illegible] [illegible] [illegible] [illegible] [illegible] [illegible] [illegible].

[illegible]

- [illegible]
- [illegible] [illegible] [illegible] [illegible]
- [illegible] [illegible]

[illegible]

[illegible] [illegible] [illegible] [illegible] [illegible] [illegible] [illegible] [illegible]. [illegible] [illegible] [illegible], 5 [illegible] 6 [illegible] [illegible], [illegible] [illegible] [illegible], [illegible] [illegible] [illegible] [illegible] [illegible].

[illegible]

[illegible]	[illegible]
[illegible]	[illegible]
[illegible]	[illegible]

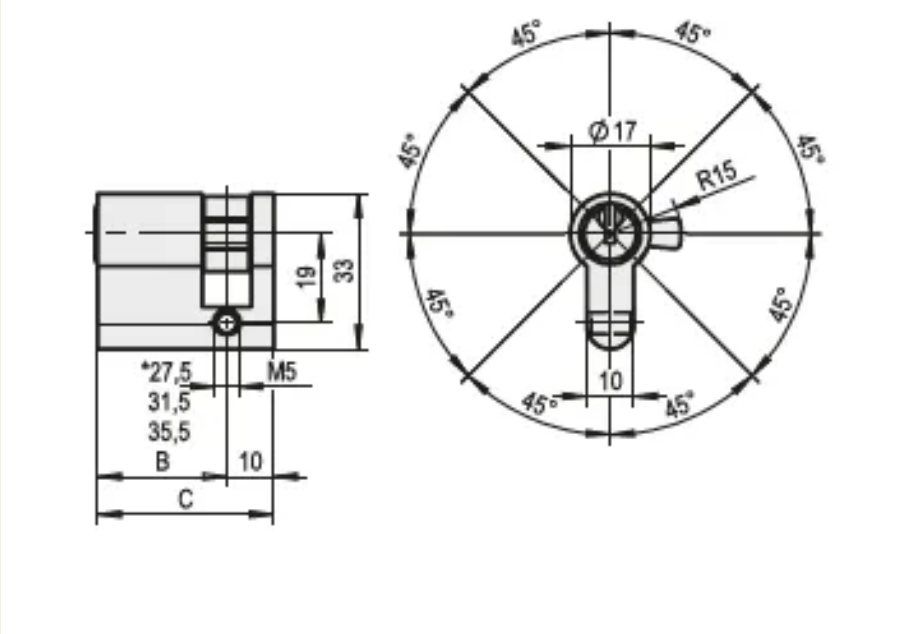
45°
45°
45°
45°
45°
45°
45°
45°
Ø 17
R15
19
33
*27,5
31,5
35,5
M5
B
10
C
10