[illegible]

SECURITY
MADE IN GERMANY
SINCE 1883

[illegible]

[illegible]: V14160000

[illegible]

[illegible]

[illegible], 5 [illegible] 6 [illegible]

[illegible]
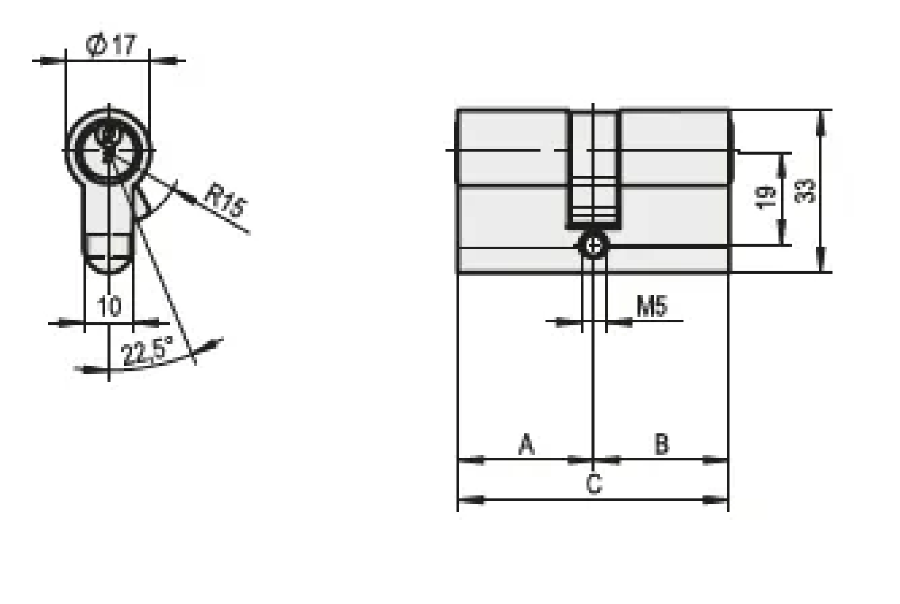
[illegible]	[illegible]
[illegible]	[illegible]
[illegible]	[illegible]