SECURITY
MADE IN GERMANY
SINCE 1883

[illegible] [illegible] [illegible] [illegible] 2-[illegible] [illegible]

[illegible] [illegible]: V15406280

[illegible] [illegible] [illegible] [illegible] [illegible] [illegible] [illegible] [illegible] [illegible] [illegible].



[illegible]

- [illegible] [illegible] [illegible]
- [illegible] [illegible] [illegible] [illegible] [illegible], [illegible] [illegible]

[illegible] [illegible]

[illegible] [illegible] [illegible] [illegible] [illegible] [illegible] [illegible] [illegible] [illegible] [illegible] [illegible] [illegible] [illegible] [illegible].

[illegible] [illegible]

[illegible]	[illegible]
[illegible]	[illegible]
[illegible]	[illegible]



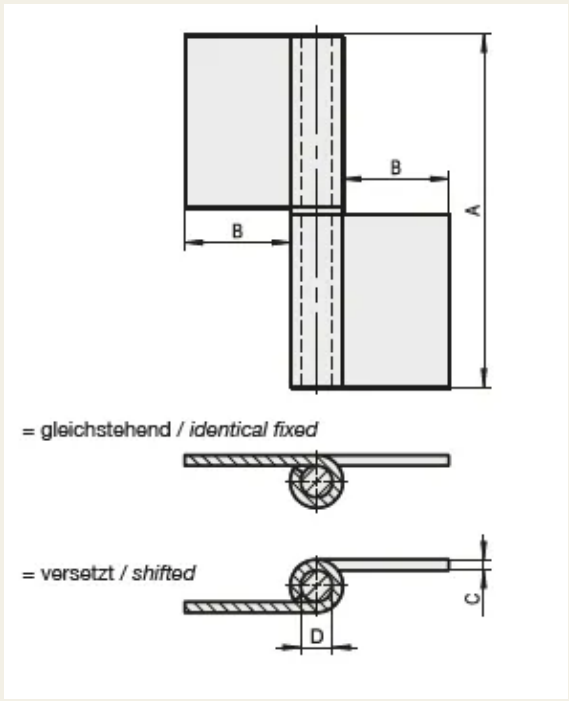
B
B
A
= gleichstehend / identical fixed
= versetzt / shifted
C
D