[illegible]

SECURITY
MADE IN GERMANY
SINCE 1883

[illegible] [illegible] [illegible] [illegible]

[illegible]: V15407051/2

[illegible] [illegible] [illegible] [illegible] [illegible] [illegible]
[illegible].

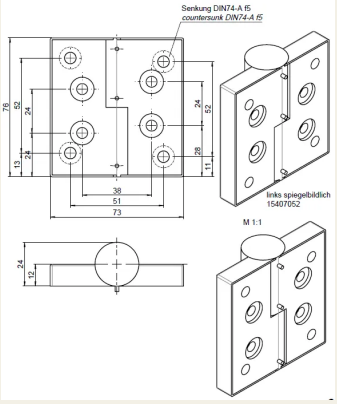

[illegible] [illegible]

[illegible] [illegible] [illegible] [illegible] [illegible] [illegible] [illegible] [illegible]
[illegible], [illegible] [illegible] [illegible].

[illegible] [illegible]
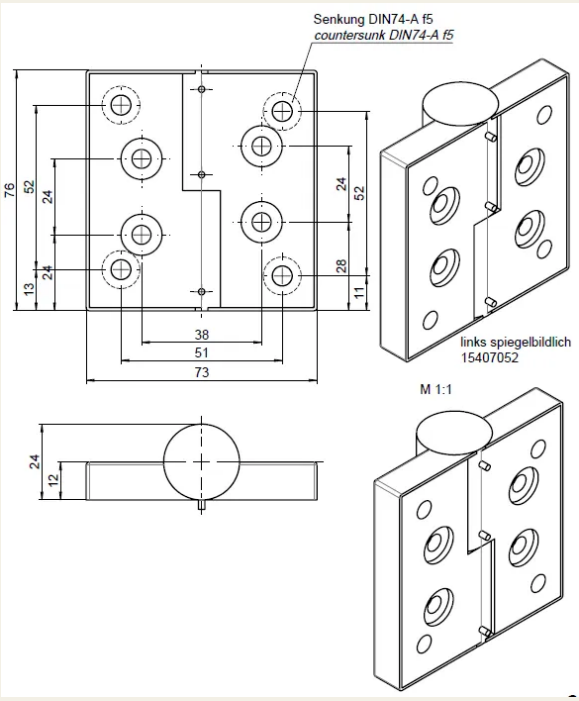
[illegible]	[illegible]
[illegible]	[illegible]