SECURITY
MADE IN GERMANY
SINCE 1883

Rosettenschutzbeschlag für Comfortzylinder - PL6011-RSB1

[redacted]: VA73400202

[redacted] Comfort - PL6011-RSB1

[redacted]

- [redacted] (IP44). [redacted]

[redacted]

[redacted],
[redacted].

[redacted]

[redacted]	[redacted]
[redacted]	[redacted]
[redacted]	[redacted]
[redacted]	[redacted]
[redacted]	[redacted]: [redacted] 3-[redacted] DIN 74-A M4; [redacted]: [redacted] 3-[redacted]
[redacted]	[redacted] — [redacted] M4x16 Torx [redacted] [redacted] [redacted] DIN 9.123 ([redacted]!)
[redacted]	185° ([redacted])
[redacted]	IP44 ([redacted])
[redacted]	[redacted]
[redacted]	[redacted] ([redacted])

□□□□□□□□□□□□□ □□□□□□□□□□□□□□□□□

□□□ □□□□□□□□□□□	□□□□□□□□□□□□□□□
□□□ □□□□□□	□□□□□□□□□ □□□ □□□□□□□□□□□□□□□□ □ □□□□□□□□□ □□□□□□
□□□ [□□]	1,325
□□□□□□□□□□□□□□□	□□□□□□□□□ □□□□□□□ □□□□ □□□□□□□□□ Comfort
□□□□□□□□ □x□x□	Ø (□□□□□□□□ □□□□□□□□□): 118 □□; Ø (□□□□□□□): 88 □□; □□□□□□ □□□□□□□ □□□□□□□□□□□□□: 31,5 □□

SECURITY
MADE IN GERMANY
SINCE 1883

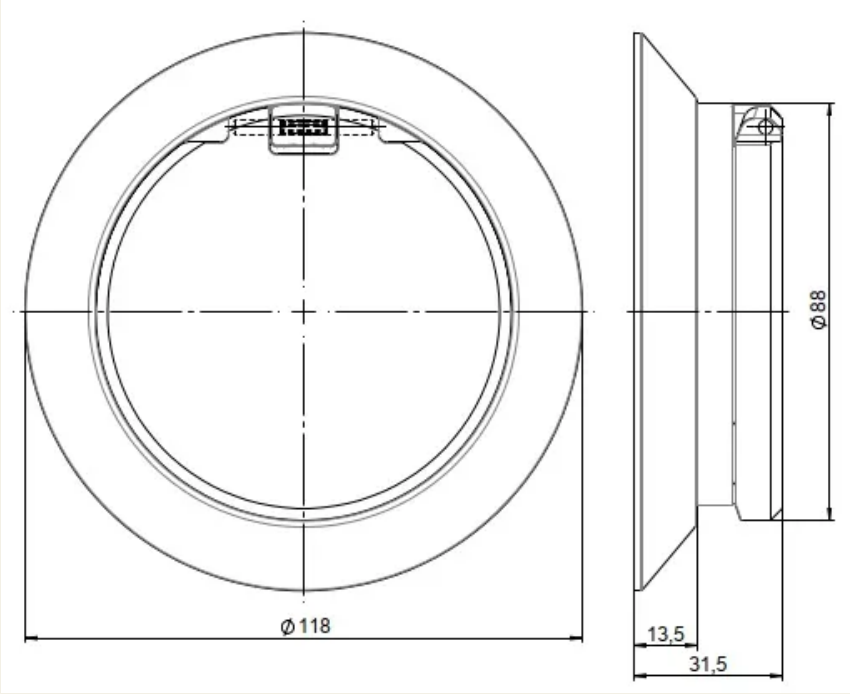
Ø 118
Ø 88
13,5
31,5