SECURITY
MADE IN GERMANY
SINCE 1883

VARILOX □□□□□ □□□ □□□□□□□□□□□□ □□□□□ □ □□□□□□□□□□□□□□□□□□

□□□□□ □□□□□□□: VARILOX.1P

□□□□□□□□□ STUV □□□□□□□□□□□□ □ □□□□□□□□□□□□□□□□□□□□ □□□□□□□□□□□ □□□□□□□□ □□□□□□□□□ □ □□□□□□□□□□ □□□□□□□□ Varilox, □□□□□□□□ □□□□□□ □□□□□ □□□□□□□□□□□□□□□□□ □□□□□□□□□□□□□□□□□□□□□. □□□□□□□□□□□ □□□□ □□□□□□□□□□ □□□□□□? □□□□□□□□□□□□ □□□□ □□□□□□□□□□□□□□ □□□□□□ □□□□ □□□□□□□□□□□□□□□□□ □□□□□□□ □□□□□? □□□□□□□□□□□ □□□□□□□□ □□□□□□□□□□□ □□□□□□ □□□□□□□□□□□□□□□□ □□□□□□□□□□□ □□□□□□□□□□□□□□□ □□□□□□□□□ □ □□□□□□□□□□ □□□□□□.

□□□□□□□□□

- □□ □□□□□□□ □ □□□□□□□□□□□□ □□□□□□□□□□□, □□□□□□□□□ □□□□ □□□□□□ (□□□□□. 10 □□□□□□□□□□□ □□□□□□□), □ □□□□□□□ □□□□□□□□□□□□□ □□□□ □□□□□□□□□□□□□□□□□□ □□□□ □□□□□□□□□□□□□□□□ □□□□□□□□□□ □□□□□□□□□□ (KABA)
- □□□□ □□□□□□□ □ □□□□□□ □□□□□□□
- □□□□□□□□□□□□□: □□□□□□□ OEM □ □□□□□□□□□□ □□□□□□□□□□□ □□ □□□□□□□□□□ □□□□□□□
- □□□□□□□□□□ □□□□ □□□□□□□□□□□ □□□□□□□ □□□□□□□, □□□□□□□□□ □□□□□□□□□□□□□ □□□□□□□□□□
- □□□□□□□□□□□□ □□□□□□□□□ □□□□□□□□□□□□ □□□□□□□□□□□□
- □□□□□□□ □□□□□□□□□□□ □□□□□□□ □□ □□□□□□□□□□□□ □□□□□□ (□□□□ □□□□□□□□□□□□ □□□□□□□□□□)
- □ □□□□□□□ □□□□ □□□□□□□□□□, □□□□□□□□□□ □□□□ 10 □□ □□□□□□□□□□□□□□□□
- □□□□□□□□□ □□□□□□□□□□□ □□□□□□□□□□□ □□□□□□□□ □□□□□□□□□□ STUV EASYLOX
- □□□□□□□□□□ □□□□□□□□□□□□ □□□□□□□□□□□□□□□ □□ -40°C □□ +80°C
- □□□□□□□□□□□□□ □□ □□□□□□ □□□□□□□□□, □□□□□□□□□ □ □□□□□□□□□□□□□□□□□ □□□□□□□□□□□□: □□□□□□□□□, □□□□□□□□□□□□□□□ □□□□□□□□□□□□□□□□□□

□□□□□□□□□ □□□□□□□□

□□□□□ □□□□□□□□□□□□□□□ □□□□□□□□□ VARILOX □ □□□□□□□□□□□□□ □□□□□□□ □□□□□□ □□□□□ □□□□□□□□□□□□□□□□□□□□□ □□□□ □ □□□□□ □□□□□□□□□□ □□□□□□□□□□□ □□□□□□□, □□□□ □ □ □□□□□□□□□□□□□□□□□□ □□□□□□□□□□ □□□□□□□□□. □□□□□□□□□□□ □□□□□□□□□ □□□□□□ □□□□□□□□□□ □ □□□□□ □□□□□□ □□□□□□□□□□□ □□□□□□□ □ □□□□□□□□□□□ □□□□□□□□□□□□□ □□□□□□□□□ □□□□ □□□□□□□□□□□ □ □□□□□□□□ □□□□□□ □□ □□□□□□ □□□□□□□□□□□.

□□□□□□ □□□□□□□□□□□

- [illegible]
- [illegible]
- [illegible]
- [illegible]
- [illegible]
- [illegible]

[illegible]

[illegible] [mm]	[illegible] 60 [illegible] 180
[illegible]	[illegible]
[illegible]	[illegible]
[illegible]	RAL 9.005
[illegible]	[illegible] / [illegible]
[illegible]	-[illegible] -40°C [illegible] +80°C
[illegible]	[illegible] 60 [illegible] 180
[illegible]	[illegible]
[illegible]	PZ, Kaba, [illegible]
[illegible]	[illegible]
[illegible]	[illegible]
[illegible] [mm]	80

SECURITY
MADE IN GERMANY
SINCE 1883

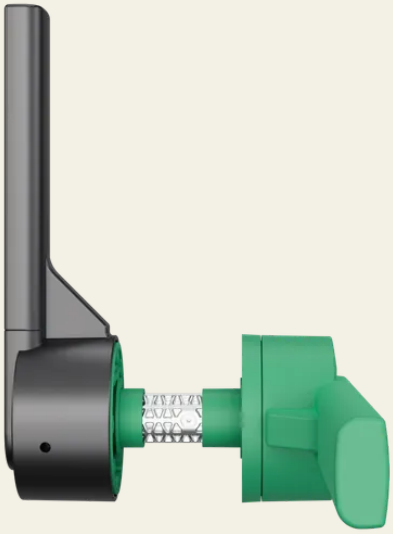
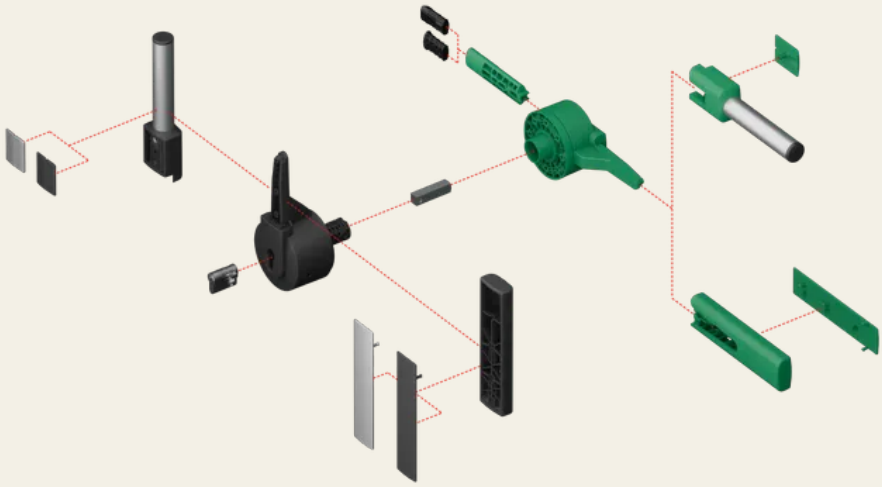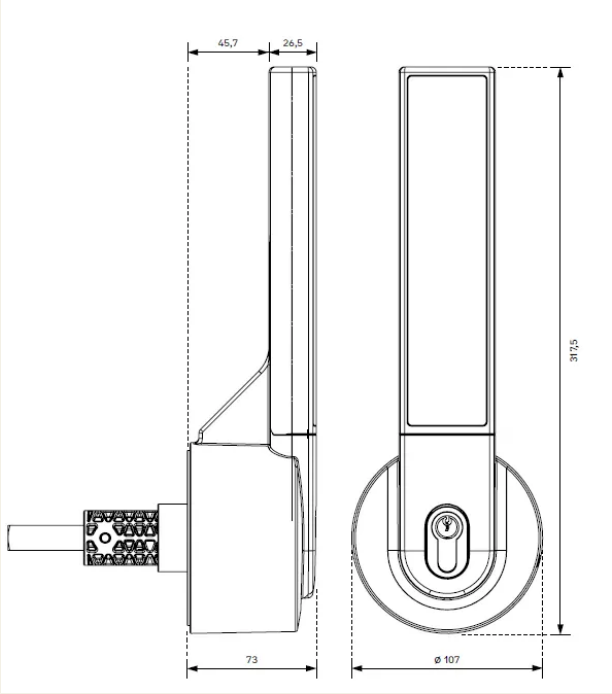
SECURITY
MADE IN GERMANY
SINCE 1883